CHAMPION 305 & 370 CUTTERS

SPECIFICATION	305 MODELS	370 MODELS
CUTTING		
Maximum Cutting Width	30-1/2″ / 77.5 cm	37″ / 94 cm
Minimum Cut: without false clamp plate	3/4″ / 19 mm	3/4″ / 19 mm
with false clamp plate	2″ / 5 cm	2-5/8″ / 6.4 cm
Maximum Cut Depth	30 -1/2″ / 77.5 cm	40″ / 102 cm
Clamp Opening: without false clamp plate	4″ / 10.2 cm	5-1/8″ / 13 cm
with false clamp plate	3-3/4″ / 9.5 cm	4-7/8″ / 12.4 cm
Clamping Method	Hydraulic	Hydraulic
Maximum Clamping Force	5000 lbs/2200daN	7000 lbs/3100daN
Backgauge Control	Power	Power
DIMENSIONS		
Table Space: in front of knife	25″ / 63.5 cm	25″ / 63.5 cm
A Table Height	36-1/2″ / 94 cm	36″ / 92 cm
B Overall Height	58-1/2″ / 149 cm	60″ / 153 cm
C Overall Width (with side tables)	78-1/2″ / 200 cm	109″ / 277 cm
Overall Width (without side tables)	51″ / 130 cm	63-1/2″ / 162 cm
D Overall Length	71″ / 180 cm	87″ / 221 cm
E Mounting Dimension	45-1/2″/115.6 cm	60-1/4″ / 153 cm
Door Pass-through: assembled	51″ / 130 cm	63-1/2″ / 162 cm
with table/treadle removed	42″ / 106 cm	35″ / 89 cm
with table/treadle/power unit removed	29″ / 74 cm	-na-
Net Weight (approximate)	2360 lbs / 1070 kg	3750 lbs / 1701 kg
Shipping Weight (approximate)	2500 lbs / 1134 kg	4600 lbs / 2086 kg
ELECTRICAL		
305 Standard Motor	5 H.P., 3 Phase, 60 Hz, AC, 208/230 Volts, 25 Amps. Service size 40 Amps. Single Phase Supply Kit : K-3482 OPTIONAL: 460 Volts, 11.5 Amps. Service size 20 Amps.	
370 Standard Motor		10 H.P., 3 Phase, 60 Hz, AC, 208 Volts/38 Amps; 230 Volts/33 Amps, Service size 60 Amps or OPTIONAL: 460 Volts/20 Amps. Service size 40 Amps

Dimensions are keyed to the specifications in the chart above.

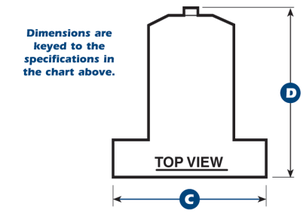

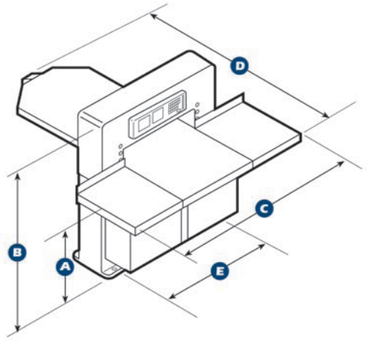

PDS Print Digital Solutions
416-297-7996 • 800-608-4506 www.PrintDigitalSolutions.com

CHALLENGE

CHAMPION 305 & 370

CHALLENGE

PAPER CUTTERS

ASSURANCE YOU MADE THE RIGHT DECISION

CHAMPION 305 & CHAMPION 370 PROGRAMMABLE PAPER CUTTERS

Champion cutters are engineered entirely by Challenge. We have complete control of product development, engineering, manufacturing, and support which enhances our ability to provide features designed specifically for your finishing needs. This ensures that Challenge customers receive superior quality equipment and continued support.

CHALLENGE

A RICH HERITAGE & AN EXCITING FUTURE

- Serving the graphic arts industry since 1870
- Engineering excellence
- Produced the world's first paper cutter in 1887
- Introduced hydraulic cutting in 1940
- Introduced programmable cutting in 1968
- A leader in marketplace innovation

SAFE

The primary focus of Challenge engineering has always been **safety**. A state-of-the-art **light beam safety curtain system** protects the operator in the cutting area on all Champion models. All other openings and potential pinch points are protected by physical barriers and covers. **Soft power pre-clamping** is activated by a guarded foot pedal. The **two-hand timed cut button activation system** requires simultaneous and continuous activation of the cut switches during the cut cycle providing a secondary safety monitoring system during operation...doubling the operators protection.

UL,cUL, & CE LISTING CERTIFICATIONS ON EVERY CHAMPION CUTTER

Only Challenge brings all three of these certifications to the market in the Champion cutter sizes. Challenge exceeds all ANSI Safety Standards as well (American National Standards Institute).

ERGONOMIC

Along with all the other ergonomic features, Challenge's EXCLUSIVE **Ergo-Touch Cut Button option** provides protection from one of the most repetitive movements required of a cutter operator - the continual pressing of the cut buttons during the cut cycle. The Ergo-Touch cut button system requires the same dual handed interaction from the operator but does not require him/her to hold in place spring pressured buttons. This system only requires that the operator's finger be present in each cut switch device during the cut cycle providing ergonomic relief on the operator's hands and wrists.

Challenge Exclusive Ergo-Touch Button System (optional)

BACKGAUGE POSITIONING ACCURACY INDEPENDENT OF THE LEAD SCREW

Only Challenge goes to the extra step to remove the measurement of the backgauge position from the rotations of the lead screw. A precision rack and pinion gear system that is not affected by wear in the lead screw over time provides a precise measurement of the backgauge location in relation to the knife.

FASTER BACKGAUGE POSITIONING

The **NEW TC Control System** produces the fastest backgauge positioning and performance since the Champions inception in 1960. This results in improved productivity and efficiency.

LOW MAINTENANCE

- Easier access to the few lubrication points remaining.
- Challenge Champions use **UHMW (Ultra High Molecular Weight) pads on the knife bar gibs** which don't require greasing. These are extremely smooth devices that remain strong and slick through millions of cycles eliminating required lubrication in one of the most common wear points for paper cutting machines.
- Composite bushings on the knife and clamp linkages don't require routine maintenance. No longer will you have component failure or wear from connectors that have received deficient lubrication.

CHAMPION CUTTERS HAVE EARNED A REPUTATION FOR DEPENDABILITY AND DURABILITY

Purchasers of Champion paper cutters have been rewarded years later with excellent resale value. Champions hold their value extremely well making them one of the most sought after cutters in the used equipment market. This combined with low maintenance cost and an affordable initial investment make Challenge cutters the total cost of ownership leader in the marketplace.

STANDARD FEATURES

- 305 model – 30-1/2" cutting width & 4" clamp opening
- 370 model – 37" cutting width & 5-1/8" clamp opening
- Hydraulic clamping and cutting
- Electronic Controlled Adjustable Clamp pressure
- Soft Power foot pedal activated pre-clamping
- Electronic hand-wheel on front of table for backgauge adjustment
- Line-light cut position indicator
- Metric and English data entry with the acceptance of fractions that are automatically calculated to decimal equivalents
- False Clamp Plate
- Cast Iron and Steel construction
- Air Table
- Knife Change and Lubrication schedule alerts
- Computer Diagnostics
- Lighted work surface

TC SYSTEM PROGRAMMING FEATURES

- 10.5" Color Touch Screen control
- Clean layout and easy to use with operator prompts and assistance
- Unrestricted program storage capacity
- Programmable Clamp pressure control per cut
- JDF and network capable hardware
- USB port for simple thumb drive program entry
- Receives .csv files from common market spreadsheet software making offline programming and memory storage simple to implement
- Repeat and Loop commands greatly simplify program entry improving efficiency
- Software runs on a real time operating platform with Challenge proprietary software
- Fast backgauge speeds
- Auto-programming features (sheet division & label cutting) with animated graphics

Both the 30-1/2" and 37" cutting widths feature the Challenge engineered TC Control System. Champion cutters continue the long legacy of Challenge safety, productivity, innovation, and durability.